GENERAL

SPLIT TYPE
AIR CONDITIONER
SLIM DUCT TYPE (50Hz)

SERVICE MANUAL

Refrigerant
R410A

Indoor unit	Outdoor unit
ARHG12LLTB	AOHG12LALL
ARHG14LLTB	AOHG14LALL
ARHG18LLTB	AOHG18LALL

CONTENTS

SPECIFICATIONS 1
DIMENSIONS. 2
REFRIGERANT SYSTEM DIAGRAM . . . 4
CIRCUIT DIAGRAM. 5
INDOOR PCB CIRCUIT DIAGRAM. 6
OUTDOOR PCB CIRCUIT DIAGRAM. . .10
ERROR DETECTION. 12
PARTS (INDOOR UNIT). 13
PARTS (OUTDOOR UNIT) 18
ACCESSORIES. 20

FUJITSU GENERAL LIMITED

SPECIFICATIONS

ELECTRICAL DATA

TYPE		Inverter cooling & heating		
INDOOR UNIT		ARHG12LLTB	ARHG14LLTB	ARHG18LLTB
OUTDOOR UNIT		AOHG12LALL	AOHG14LALL	AOHG18LALL
COOLING CAPACITY		3.50 kW	4.30 kW	5.20 kW
HEATING CAPACITY		4.10 kW	5.00 kW	6.00 kW
POWER SOURCE		230 V, 50 Hz		
RUNNING CURRENT	Cooling	4.8 A	6.1 A	7.2 A
	Heating	5.1 A	6.1 A	7.4 A
INPUT WATTS	Cooling	1.05 kW	1.33 kW	1.62 kW
	Heating	1.11 kW	1.34 kW	1.66 kW
E.E.R.	Cooling	3.33 kW/kW	3.21 kW/kW	3.21 kW/kW
COP	Heating	3.69 kW/kW	3.71 kW/kW	3.61 kW/kW
MOISTURE REMOVAL		1.3 L/hr	1.5 L/hr	2.0 L/hr
AIR CIRCULATION (HIGH)		650 m3/hr	800 m3/hr	940 m3/hr
MAXIMUM CURRENT	Cooling	7.5 A	9.0 A	9.0 A
	Heating	10.0 A	12.5 A	12.5 A

FAN MOTOR

INDOOR UNIT, Discrimination		MFG-14WV		
INDOOR UNIT	High	1,340 r.p.m.	1,560 r.p.m.	1,380 r.p.m.
	Medium	1,240 r.p.m.	1,400 r.p.m.	1,300 r.p.m.
	Low	1,140 r.p.m.	1,240 r.p.m.	1,220 r.p.m.
	Quiet	1,030 r.p.m.	1,030 r.p.m.	1,140 r.p.m.
OUTDOOR UNIT, Discrimination		MFE-63NOM		
OUTDOOR UNIT (cool)		770 r.p.m.	820 r.p.m.	860 r.p.m.
OUTDOOR UNIT (heat)		700 r.p.m.	750 r.p.m.	820 r.p.m.

NOISE LEVEL

INDOOR UNIT (cool)	High	29 dB	32 dB	32 dB
	Medium	28 dB	30 dB	30 dB
	Low	26 dB	28 dB	29 dB
	Quiet	25 dB	26 dB	27 dB
INDOOR UNIT (heat)	High	29 dB	32 dB	32 dB
	Medium	28 dB	30 dB	30 dB
	Low	26 dB	28 dB	29 dB
	Quiet	24 dB	25 dB	27 dB
OUTDOOR UNIT (cool)		47 dB	49 dB	50 dB
OUTDOOR UNIT (heat)		48 dB	49 dB	50 dB

COMPRESSOR AND REFRIGERANT

COMPRESSOR		DA130A1F-25NA		
WEIGHT (with oil)		9.6 kg		
REFRIGERANT TYPE		R410A		
PRECHARGED		1,150 g	1,250 g	1,250 g
FULL CHARGE (Pipe length)	15 m	1,150 g	1,250 g	1,250 g
	20 m	1,250 g	1,350 g	1,350 g
	25 m	1,350 g	1,450 g	1,450 g
ADDITIONAL CHARGE		20 g/m		
MAXIMUM PIPING HEIGHT		15 m		

DIMENSIONS

INDOOR UNIT H x W x D	198 x 700 x 620 mm	198 x 900 x 620
OUTDOOR UNIT H x W x D	578 x 790 x 300 mm	

WEIGHT

INDOOR UNIT Net / Shipping	19 kg / 26 kg	23 / 30 kg
OUTDOOR UNIT Net / Shipping	40 kg / 44 kg	

DIMENSIONS

Unit : mm

INDOOR UNIT
ARHG12LLTB
ARHG14LLTB

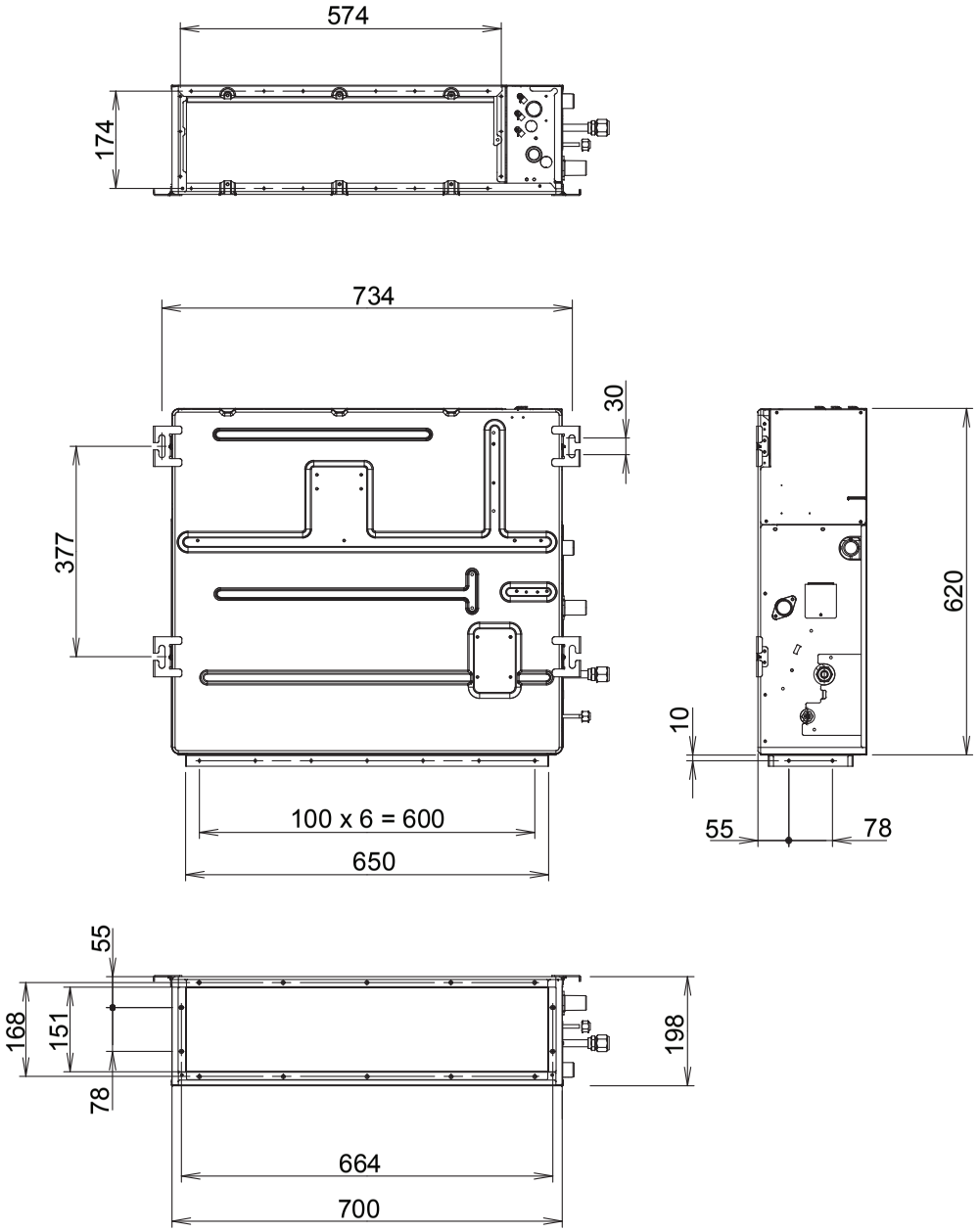

INDOOR UNIT
ARHG18LLTB

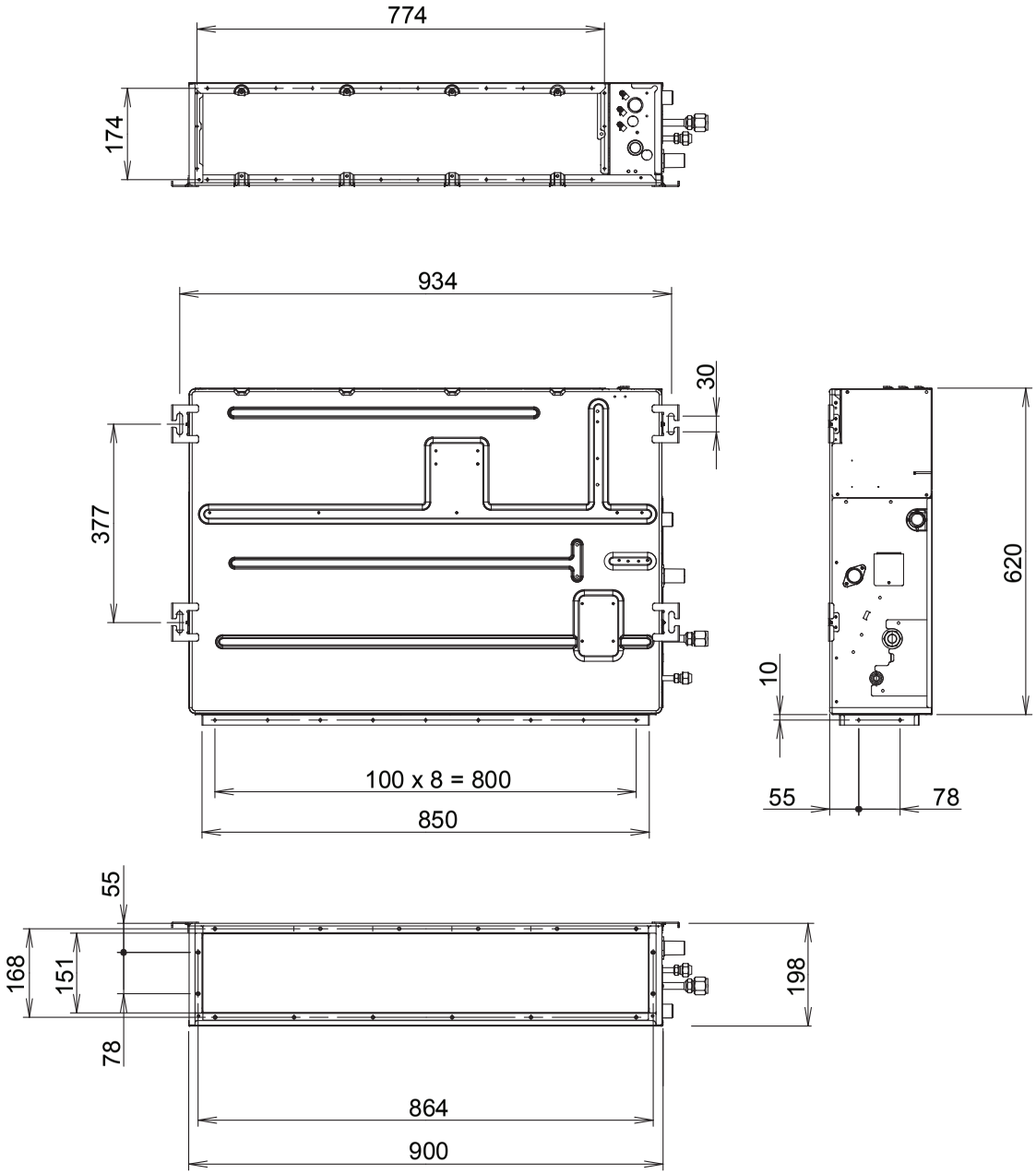

Unit : mm

OUTDOOR UNIT

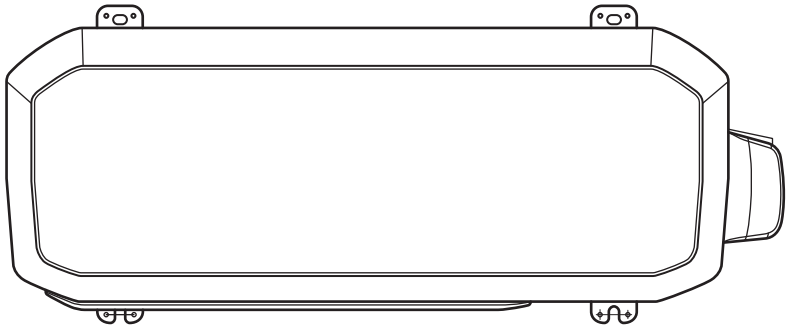

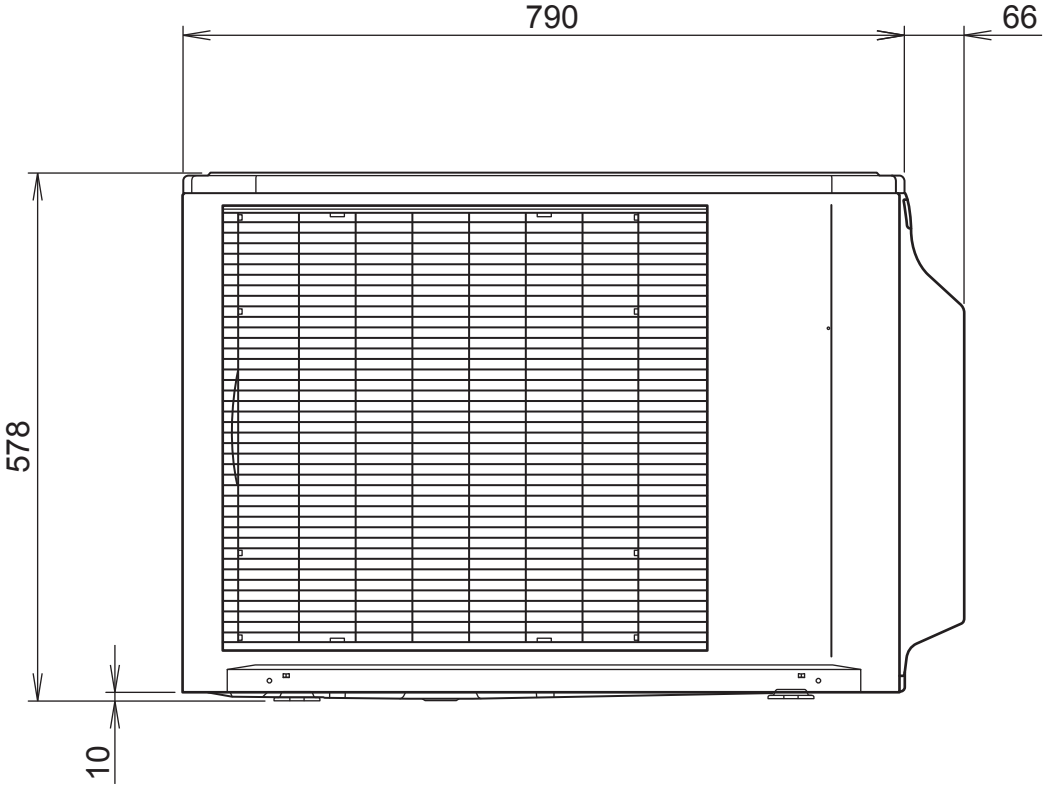

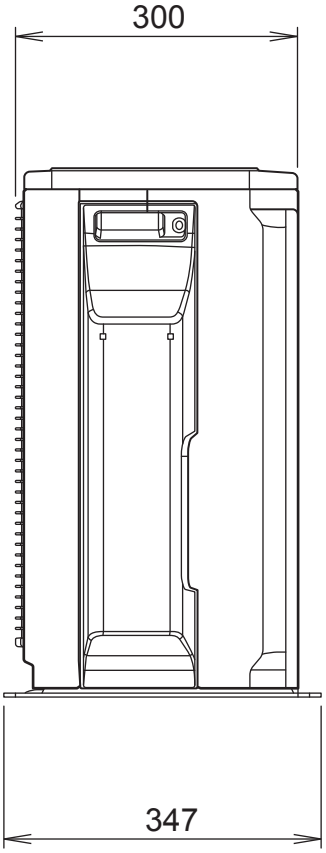

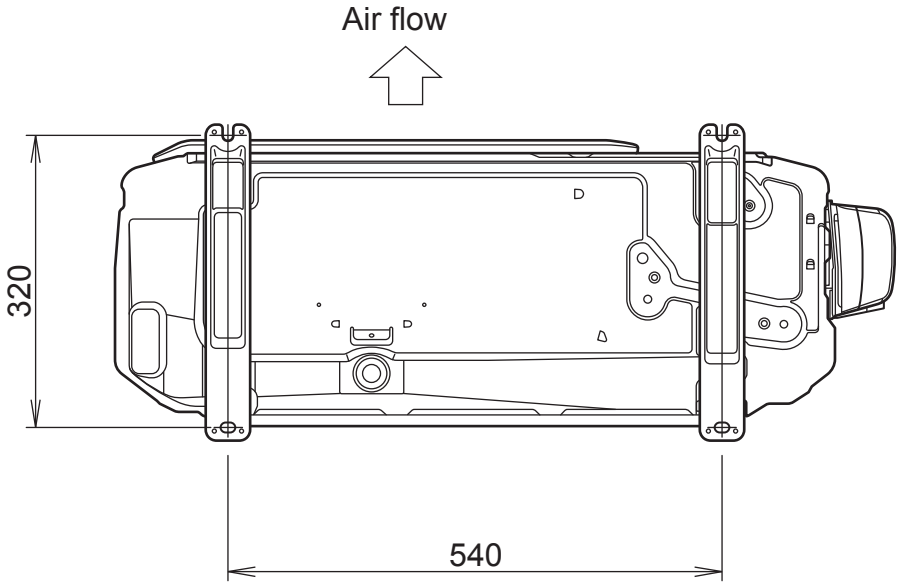

REFRIGERANT SYSTEM DIAGRAM

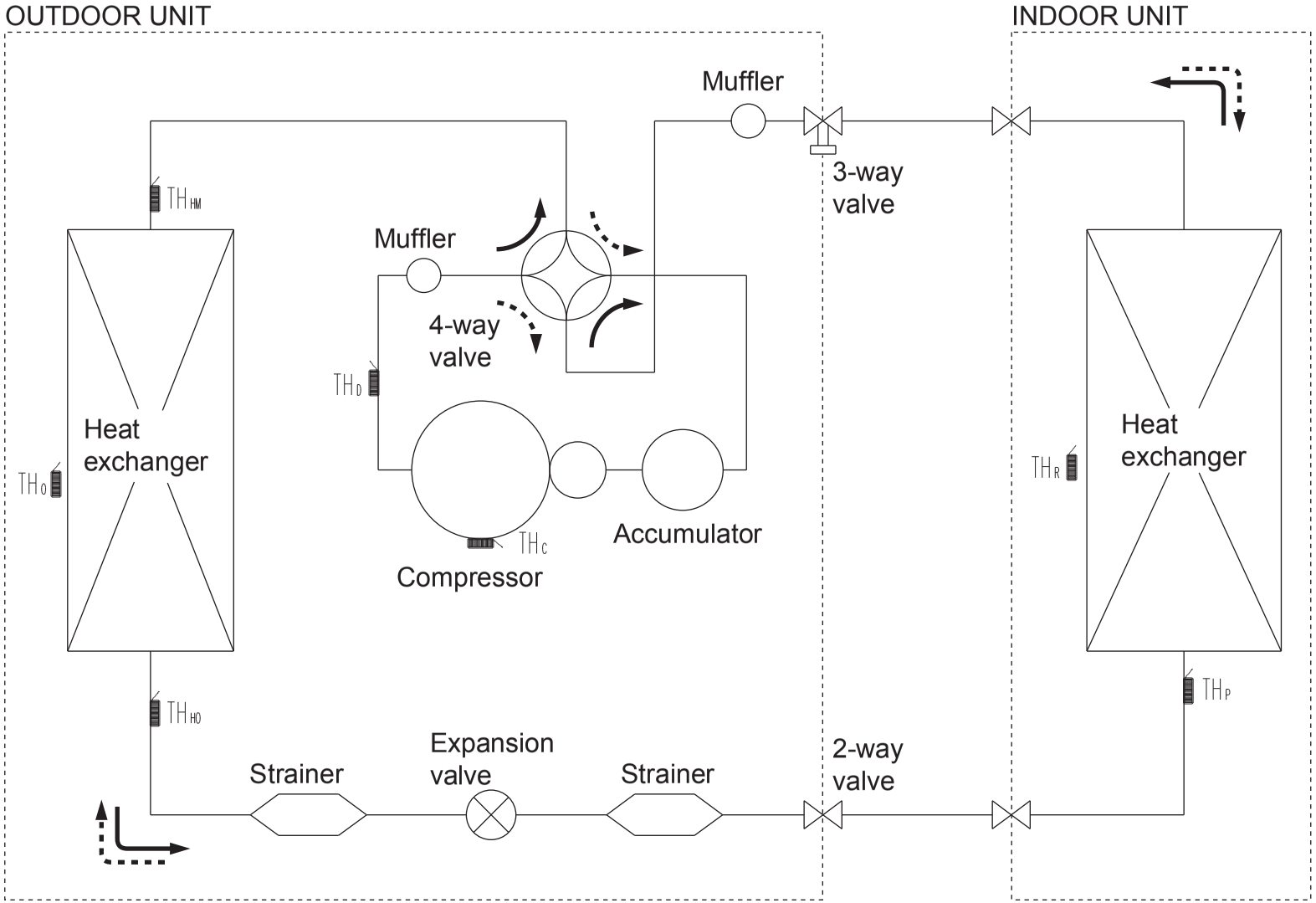

<Refrigerant direction>

Cooling

Heating

<Refrigerant pipe diameter>

12

Liquid : 1/4" (6.35 mm)

Gas : 3/8" (9.52 mm)

14, 18

Liquid : 1/4" (6.35 mm)

Gas : 1/2" (12.70 mm)

THC : Compressor thermistor

THD : Discharge pipe thermistor

THHM : Heat exchanger thermistor (Middle)

THHO : Heat exchanger thermistor (Out)

THO : Outdoor thermistor

THP : Pipe thermistor

THR : Room thermistor

CIRCUIT DIAGRAM

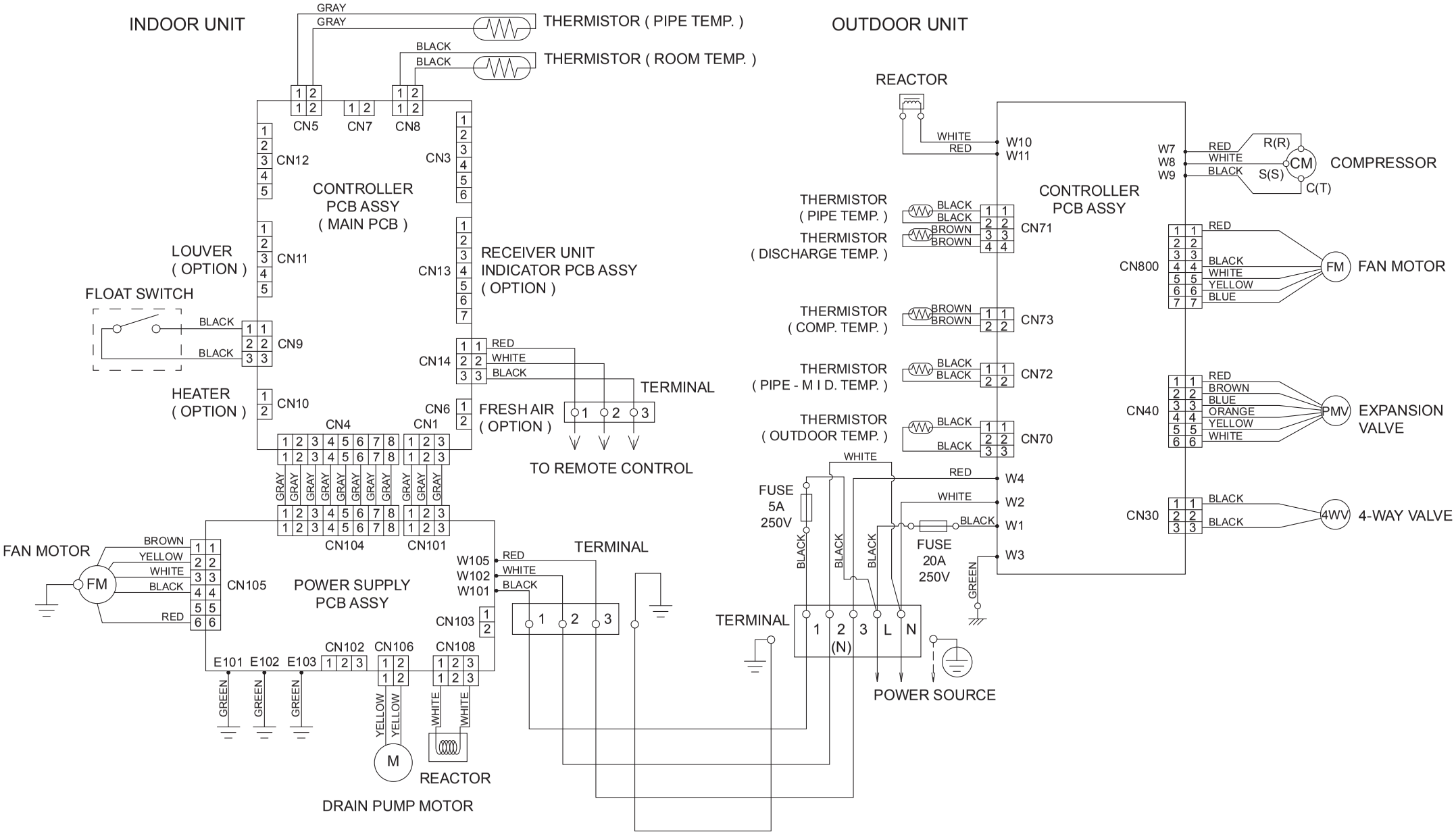

INDOOR PCB
CIRCUIT DIAGRAM

CONTROL UNIT
ARHG12LLTB : EZ-01110HSE
ARHG14LLTB : EZ-01111HSE
ARHG18LLTB : EZ-01112HSE

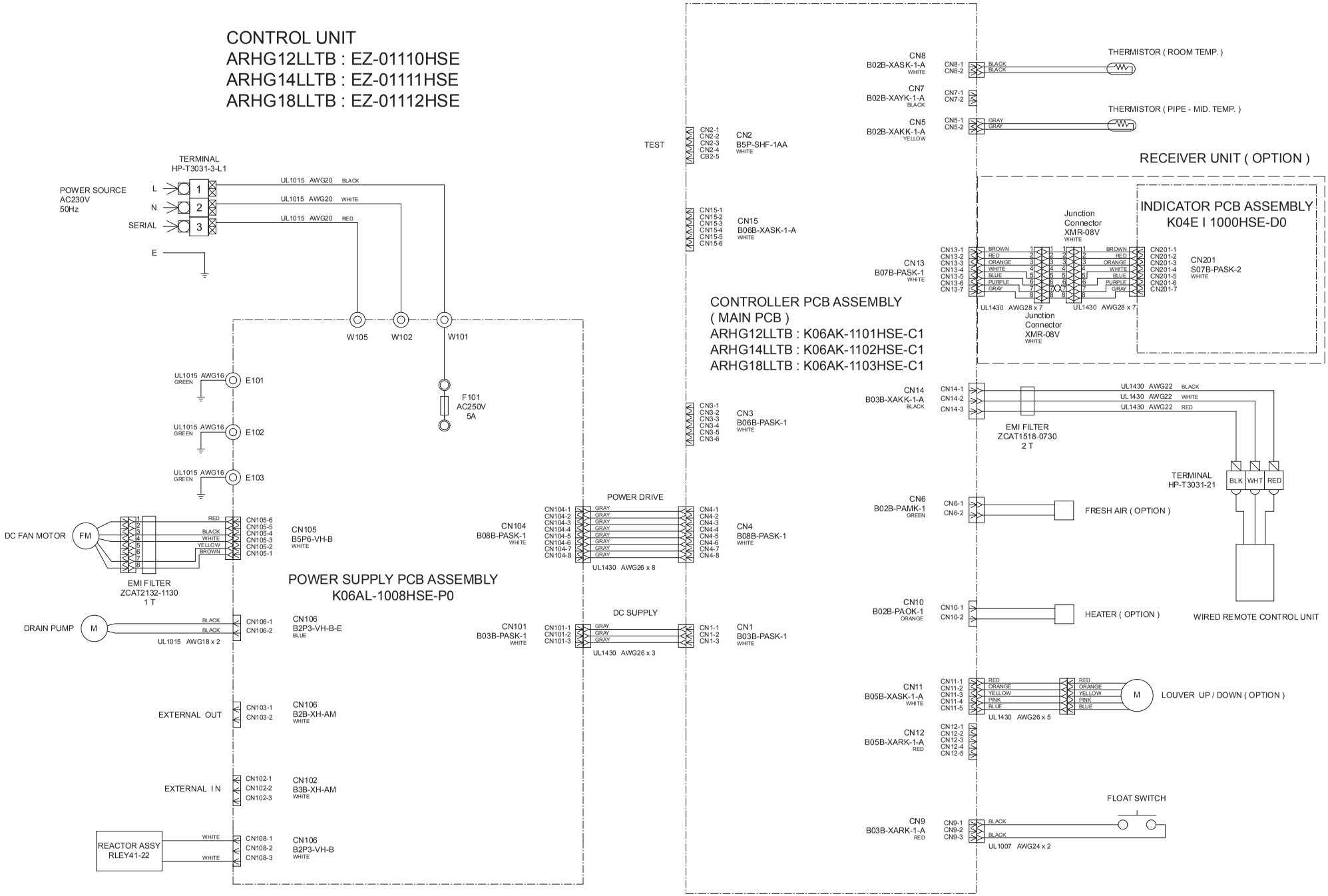

INDOOR UNIT
CONTROLLER PCB ASSEMBLY (MAIN PCB)
ARHG12LLTB : K06AK-1101HSE-C1
ARHG14LLTB : K06AK-1102HSE-C1
ARHG18LLTB : K06AK-1103HSE-C1

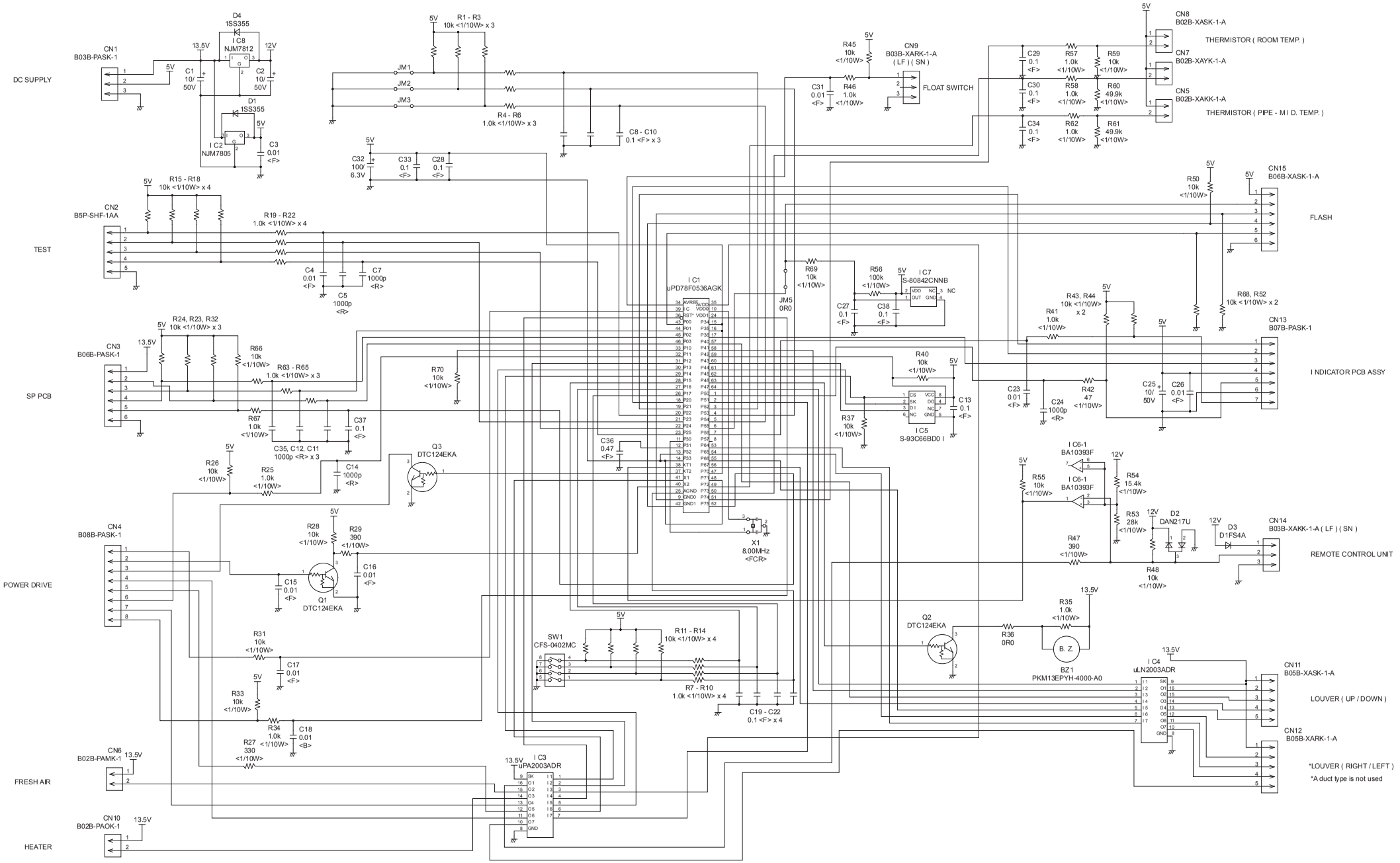

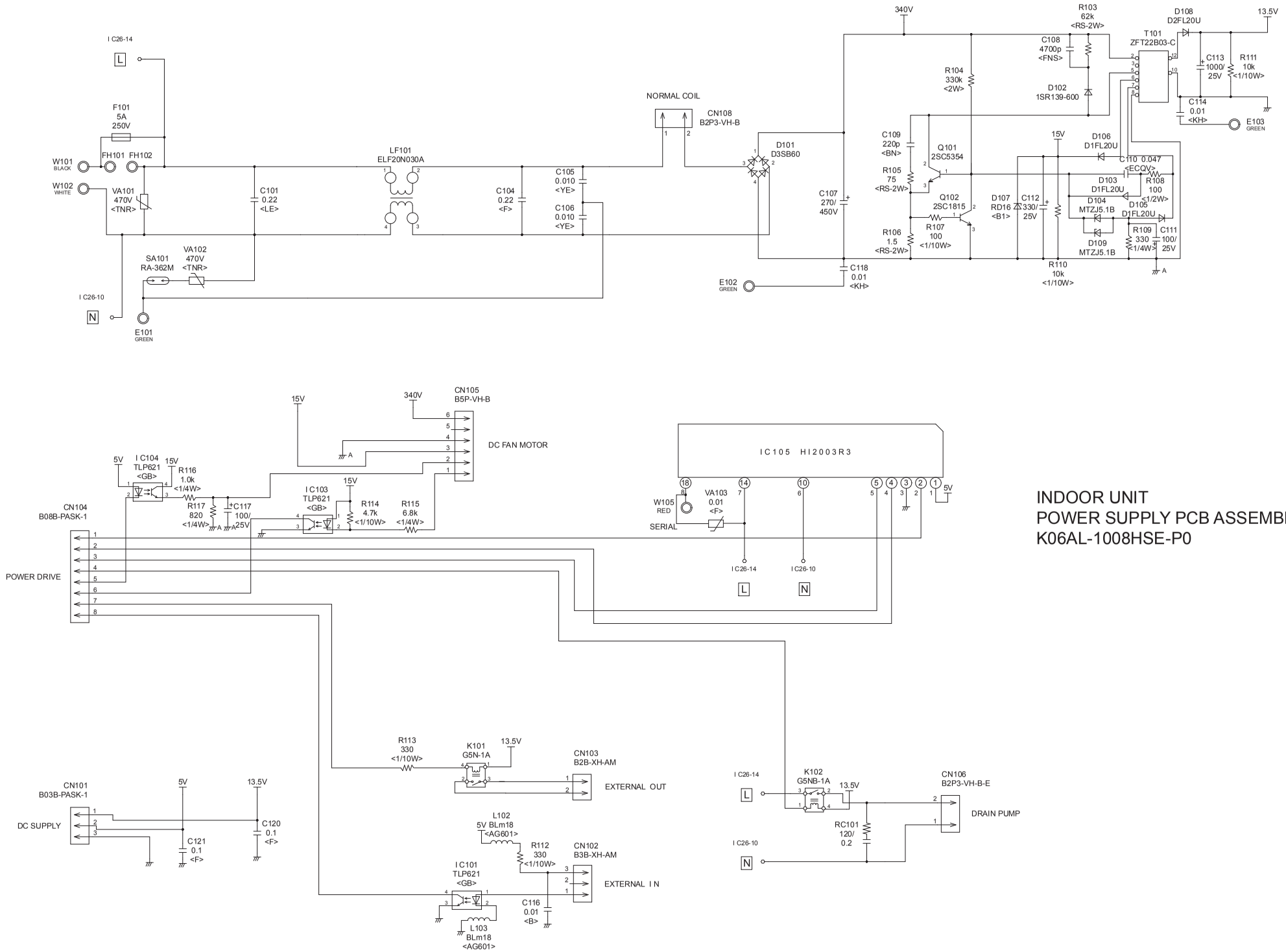

INDOOR UNIT
POWER SUPPLY PCB ASSEMBLY
K06AL-1008HSE-P0

INDOOR UNIT
INDICATOR PCB ASSEMBLY (OPTION)
K04EI-1000HSE-D0

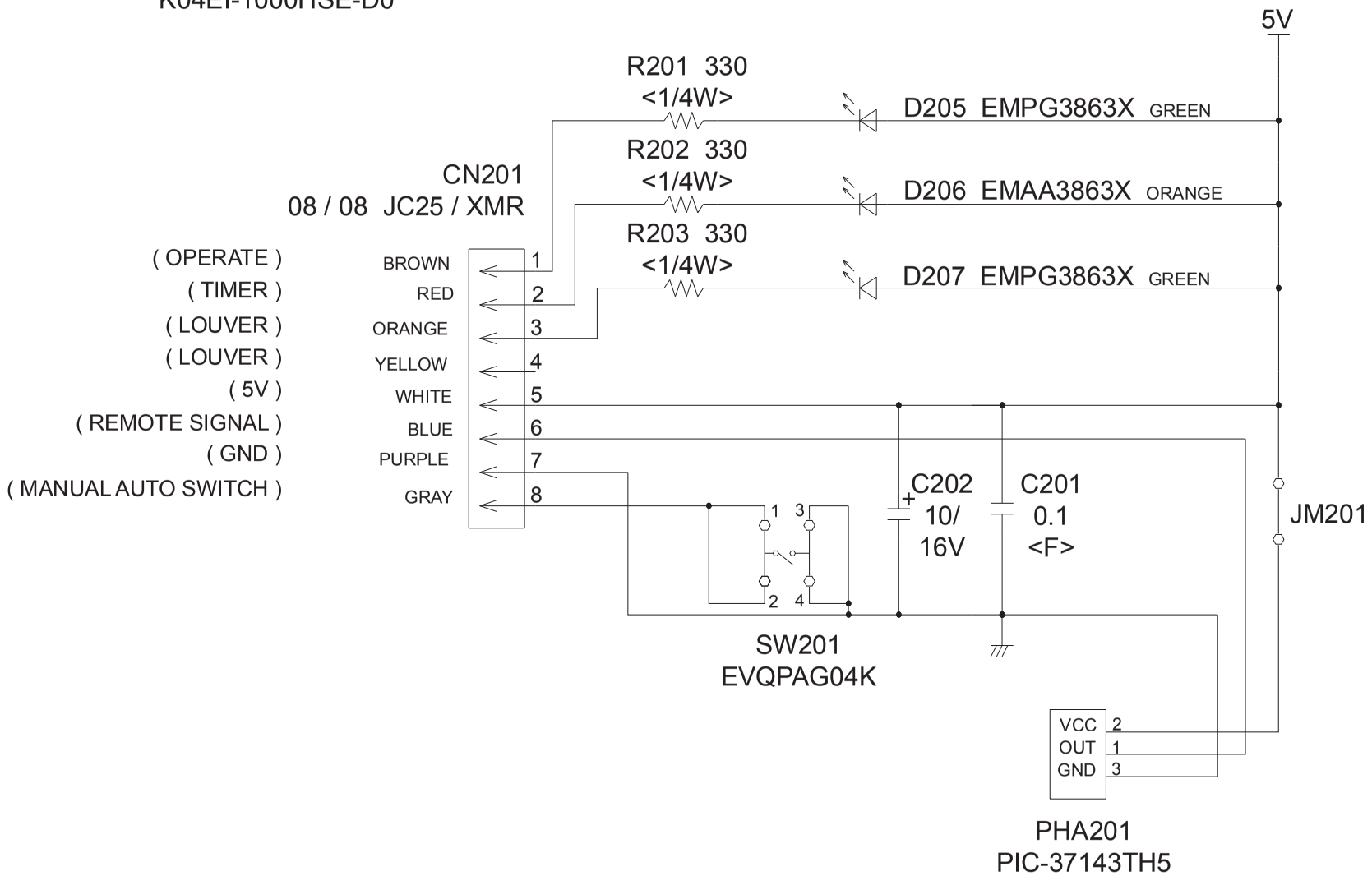

OUTDOOR PCB
CIRCUIT DIAGRAM

INVERTER ASSEMBLY
AOHG12LALL : EZ-0111FHUE
AOHG14LALL : EZ-0111GHUE
AOHG18LALL : EZ-0111HHUE

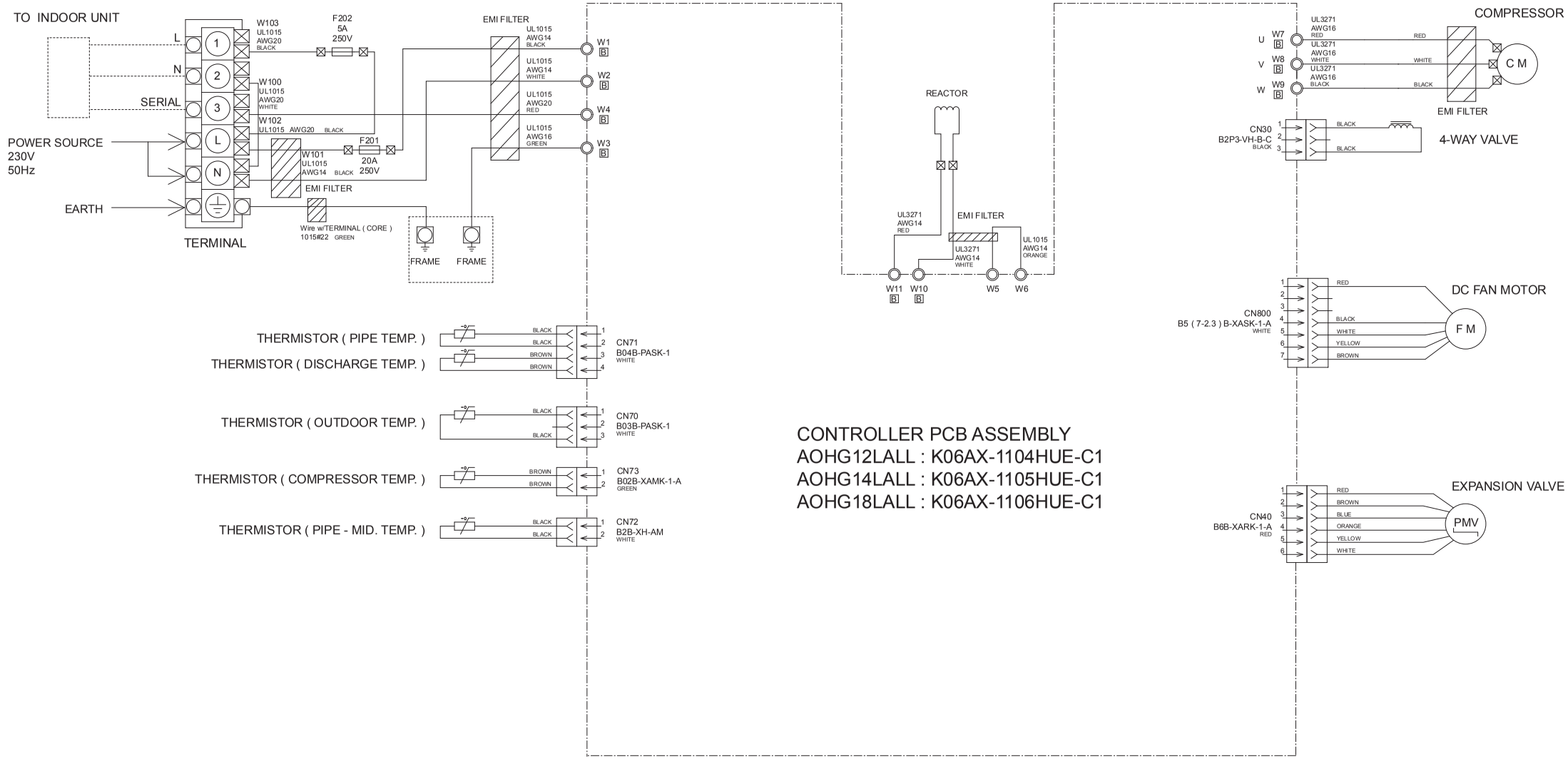

CONTROLLER PCB ASSEMBLY
AOHG12LALL : K06AX-1104HUE-C1
AOHG14LALL : K06AX-1105HUE-C1
AOHG18LALL : K06AX-1106HUE-C1

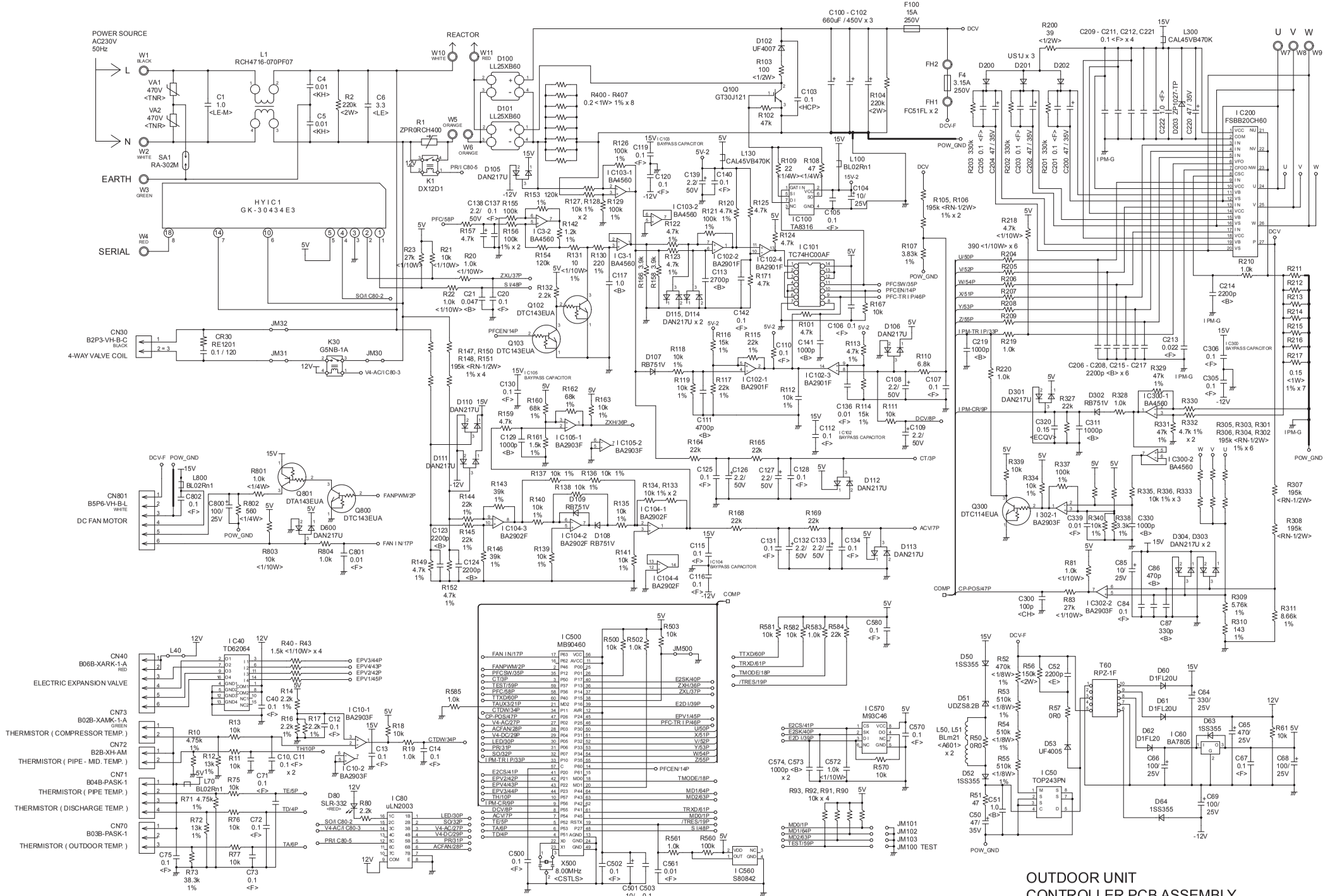
POWER SOURCE
AC230V
50Hz
EARTH
SERIAL
REACTOR
H Y I C 1
G K - 3 0 4 3 4 E 3
CN30
B2P3-VH-B-C
4-WAY VALVE COIL
CN801
B5P6-VH-B-L
DC FAN MOTOR
CN40
B06B-XARK-1-A
ELECTRIC EXPANSION VALVE
CN73
B02B-XAMK-1-A
THERMISTOR (COMPRESSOR TEMP.)
CN72
B2B-XH-AM
THERMISTOR (PIPE - MID. TEMP.)
CN71
B04B-PASK-1
THERMISTOR (PIPE TEMP.)
THERMISTOR (DISCHARGE TEMP.)
CN70
B03B-PASK-1
THERMISTOR (OUTDOOR TEMP.)
I C500
MB90460
I C570
M93C46
I C50
TOP243PN
I C60
BA7805
I C300
FSBB20CH60
U V W
OUTDOOR UNIT
CONTROLLER PCB ASSEMBLY
AOHG12LALL : K-06AX-1104HUE-C1
AOHG14LALL : K-06AX-1105HUE-C1
AOHG18LALL : K-06AX-1106HUE-C1

● : 0.5s on / 0.5s off

◇ : 0.1s on / 0.1s off

( ) : Number of flashing

ERROR DETECTION

INDOOR UNIT and WIRED REMOTE CONTROL

If you use a wireless remote control, the lamp on the photo detector unit will output error codes by way of blinking patterns.
If you use a wired type remote control, error codes will appear on the remote control display. See the lamp blinking patterns and error codes in the table. An error display is displayed only during running.

This is possible only on a wired remote control.

If an error occurs, the following display will be shown.
(“Er” will appear in the set room temperature display.)

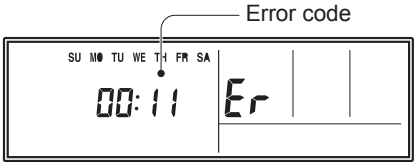

EX. Self-diagnosis

Indoor unit			Wired remote control	Description
OPERATION lamp (green)	TIMER lamp (orange)	ECONOMY lamp (green)		
●(1)	●(1)	◇	11	Serial communication error
●(1)	●(2)	◇	12	Wired remote control communication error
●(1)	●(5)	◇	15	Check run unfinished
●(2)	●(1)	◇	21	Unit number or Refrigerant circuit address setting error [Simultaneous Multi]
●(2)	●(2)	◇	22	Indoor unit capacity error
●(2)	●(3)	◇	23	Combination error
●(2)	●(4)	◇	24	• Connection unit number error (indoor slave unit) [Simultaneous Multi] • Connection unit number error (indoor unit or branch unit) [Flexible Multi]
●(2)	●(7)	◇	27	Master unit, slave unit set-up error [Simultaneous Multi]
●(3)	●(2)	◇	32	Indoor unit PCB model information error
●(3)	●(5)	◇	35	Manual auto switch error
●(4)	●(1)	◇	41	Inlet air temp. sensor error
●(4)	●(2)	◇	42	Indoor unit Heat Ex. Middle temp. sensor error
●(5)	●(1)	◇	51	Indoor unit fan motor error
●(5)	●(3)	◇	53	Drain pump error
●(5)	●(7)	◇	57	Damper error
●(5)	●(15)	◇	5U	Indoor unit error
●(6)	●(2)	◇	62	Outdoor unit main PCB model information error or communication error
●(6)	●(3)	◇	63	Inverter error
●(6)	●(4)	◇	64	Active filter error, PFC circuit error
●(6)	●(5)	◇	65	Trip terminal L error
●(6)	●(10)	◇	6A	Display PCB microcomputers communication error
●(7)	●(1)	◇	71	Discharge temp. sensor error
●(7)	●(2)	◇	72	Compressor temp. sensor error
●(7)	●(3)	◇	73	Outdoor unit Heat Ex. liquid temp. sensor error
●(7)	●(4)	◇	74	Outdoor temp. sensor error
●(7)	●(5)	◇	75	Suction Gas temp. sensor error
●(7)	●(6)	◇	76	• 2-way valve temp. sensor error • 3-way valve temp. sensor error
●(7)	●(7)	◇	77	Heat sink temp. sensor error
●(8)	●(2)	◇	82	• Sub-cool Heat Ex. gas inlet temp. sensor error • Sub-cool Heat Ex. gas outlet temp. sensor error
●(8)	●(3)	◇	83	Liquid pipe temp. sensor error
●(8)	●(4)	◇	84	Current sensor error
●(8)	●(6)	◇	86	• Discharge pressure sensor error • Suction pressure sensor error • High pressure switch error
●(9)	●(4)	◇	94	Trip detection
●(9)	●(5)	◇	95	Compressor rotor position detection error (permanent stop)
●(9)	●(7)	◇	97	Outdoor unit fan motor error
●(9)	●(9)	◇	99	4-way valve error
●(10)	●(1)	◇	A1	Discharge temp. error
●(10)	●(3)	◇	A3	Compressor temp. error
●(10)	●(4)	◇	A4	High pressure error
●(10)	●(5)	◇	A5	Low pressure error
●(13)	●(2)	◇	J2	Branch boxes error [Flexible Multi]

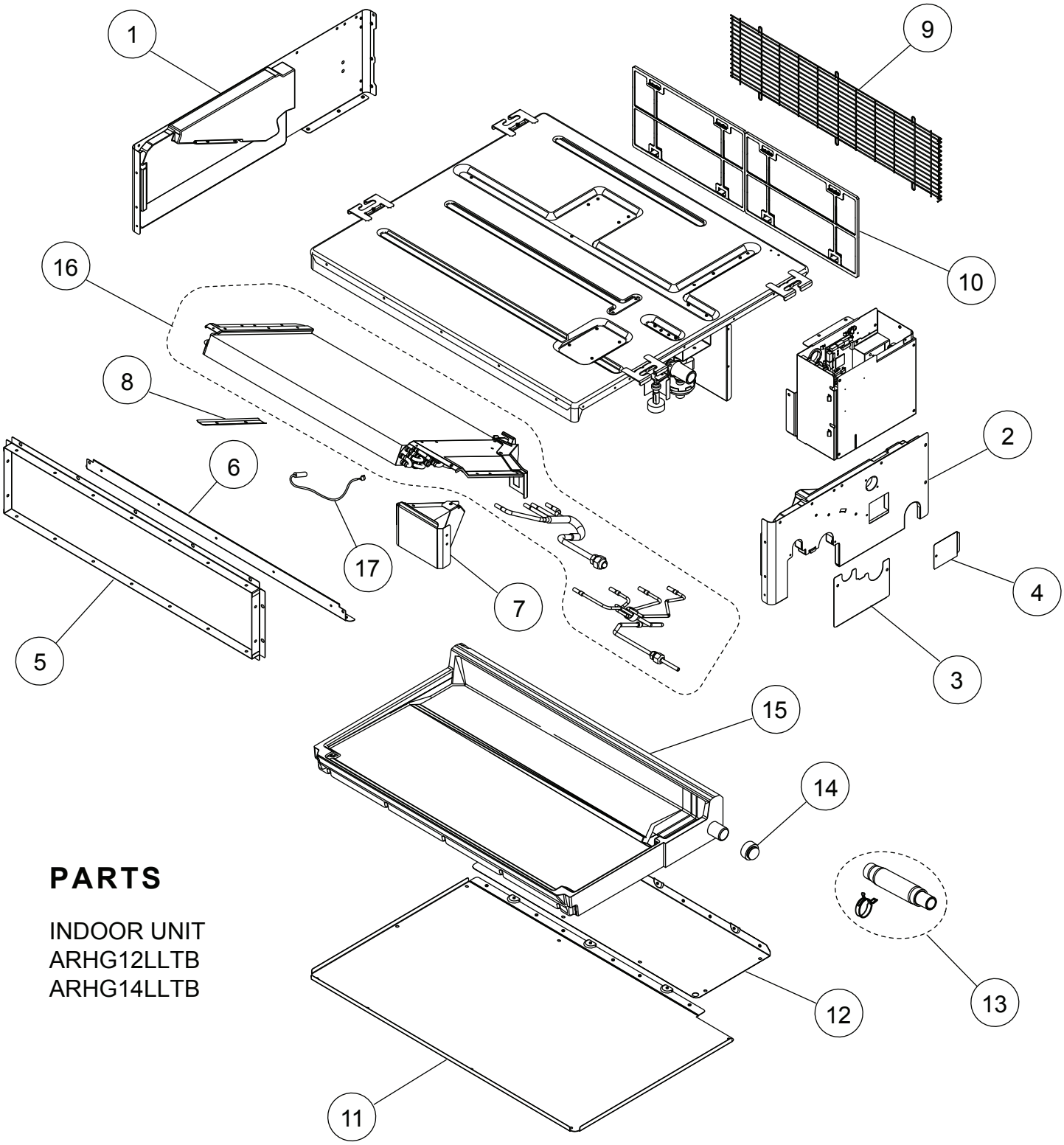

PARTS

INDOOR UNIT
ARHG12LLTB
ARHG14LLTB

Ref	Description	Parts number	
1	Side Panel R Sub Assy	9379906005	
2	Side Panel L Sub Assy	9379907002	
3	Pipe Panel Sub Assy	9379900003	
4	Panel (Window) Sub Assy	9379915007	
5	Outlet Frame Sub Assy	9379909006	
6	Front Panel (2 Fan)	9379593007	
7	Valve Cover Sub Assy	9379576000	
8	Cover Pipe Sub Assy	9380033004	
9	Fan Guard (2 Fan)	9379637008	

Ref	Description	Parts number	
10	Air Filter	9379574006	
11	Main Panel Sub Assy	9379902007	
12	Cabinet Panel (2 Fan)	9379596008	
13	Hose Sub Assy	9378450103	
14	Drain Cap	9358746004	
15	Drain Pan Sub Assy	9379901000	
16	Evaporater Sub Assy (12)	9364499581	
16	Evaporater Sub Assy (14)	9364499673	
17	Pipe Thermistor	9900623005	

INDOOR UNIT
ARHG12LLTB
ARHG14LLTB

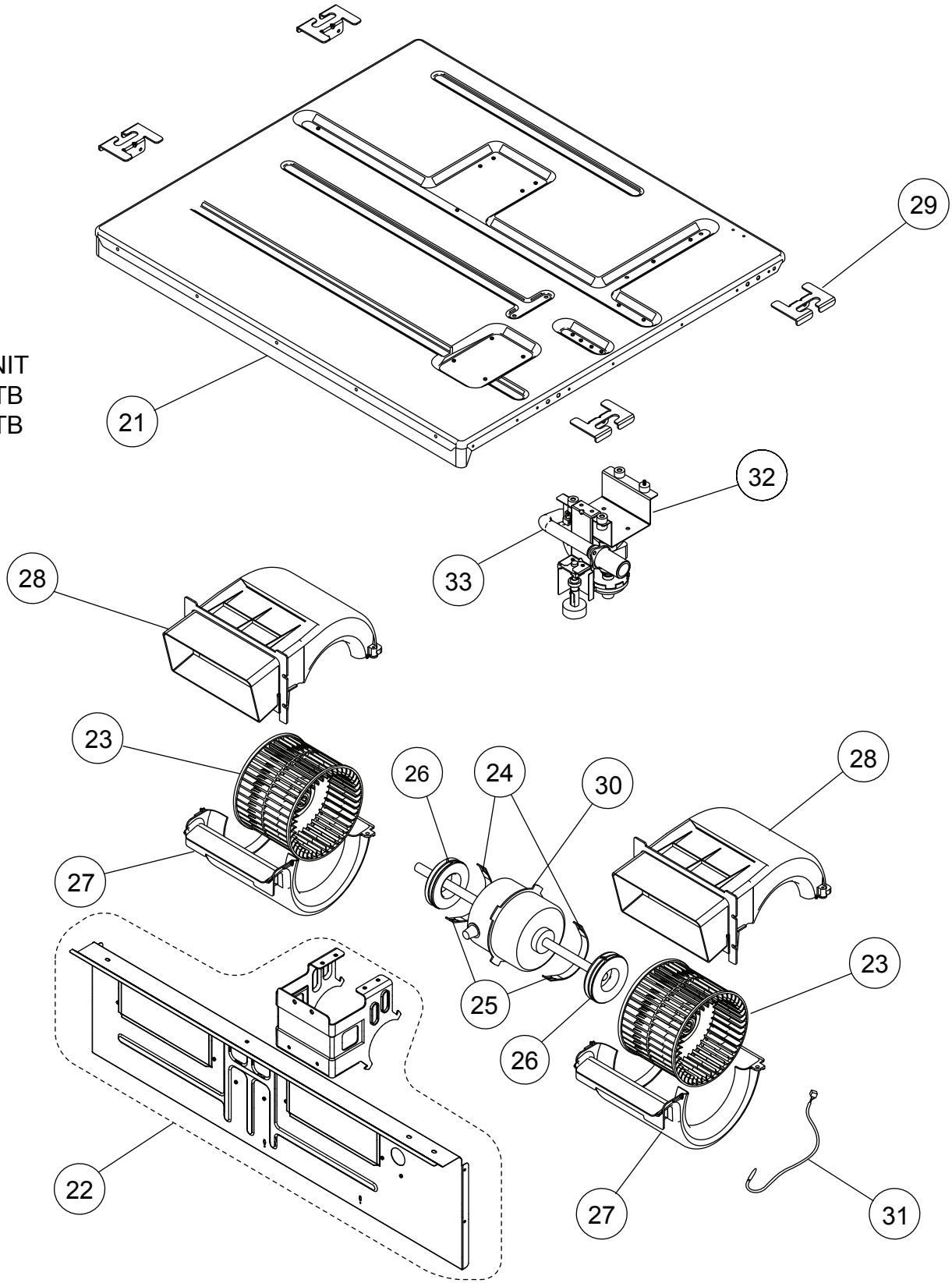

Ref	Description	Parts number	
21	Top Panel Sub Assy	9379908009	
22	Separator Sub Assy	9379898003	
23	Sirroco Fan Assy	9379570015	
24	Motor Band Assy	9379613002	
25	Motor Band	9379614009	
26	Rubber (Vibration Proof)	9379644006	
27	Casing B	9379572002	

Ref	Description	Parts number	
28	Casing U	9379571005	
29	Hook Metal	9379889001	
30	Fan Motor Assy	9602967018	
31	Room Thermistor	9703299247	
32	Drain Pump Sub Assy	9379914000	
33	Drain Hose Assy	9379913003	

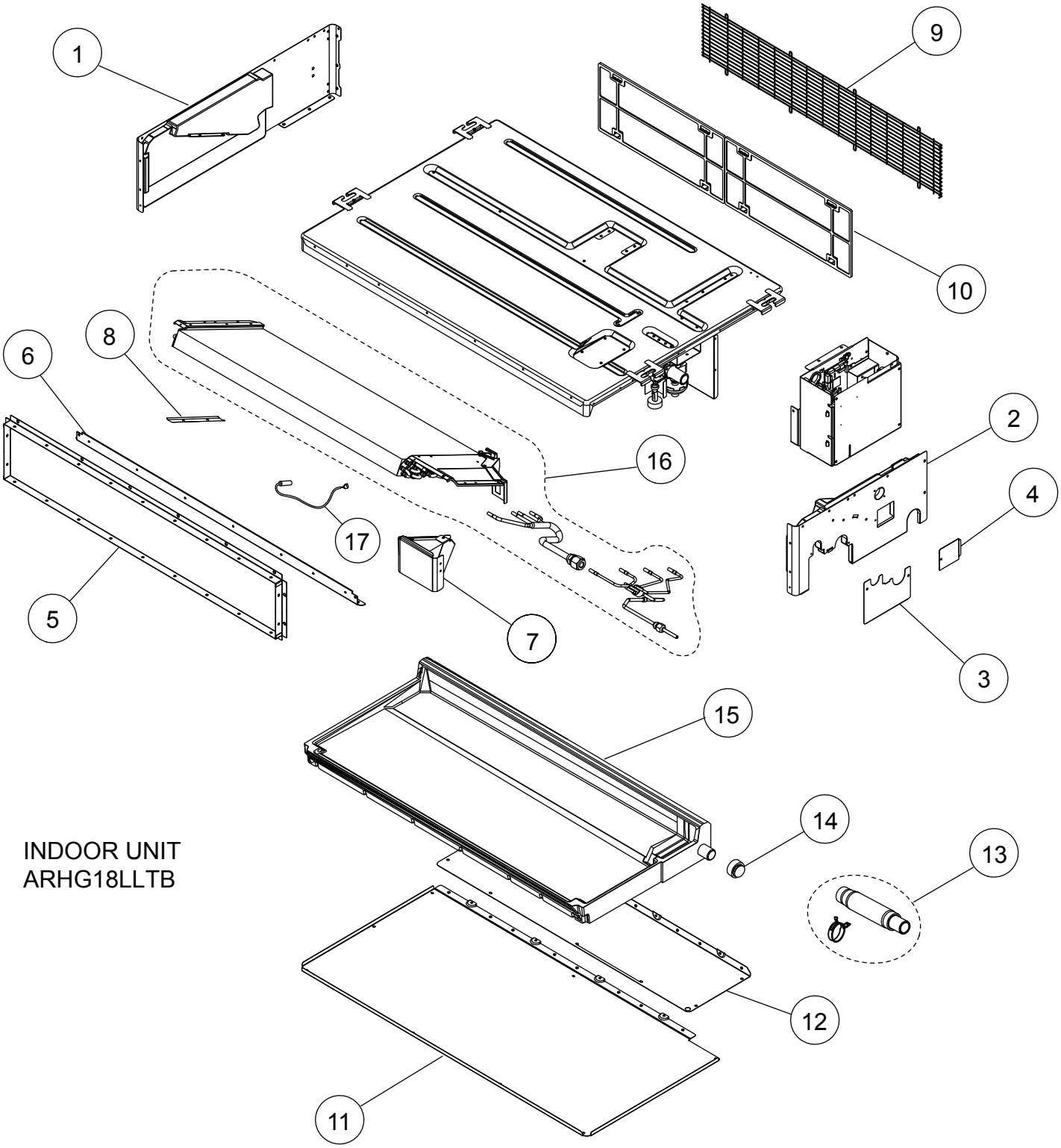

INDOOR UNIT
ARHG18LLTB

Ref	Description	Parts number	
1	Side Panel R Sub Assy	9379906005	
2	Side Panel L Sub Assy	9379907002	
3	Pipe Panel Sub Assy	9379900003	
4	Panel (Window) Sub Assy	9379915007	
5	Outlet Frame Sub Assy	9379909013	
6	Front Panel (3 Fan)	9379594004	
7	Valve Cover Sub Assy	9379576000	
8	Cover Pipe Sub Assy	9380033004	
9	Fan Guard (3 Fan)	9379638005	

Ref	Description	Parts number	
10	Air Filter	9379575003	
11	Main Panel Sub Assy	9379902014	
12	Cabinet Panel (3 Fan)	9379597005	
13	Hose Sub Assy	9378450103	
14	Drain Cap	9358746004	
15	Drain Pan Sub Assy	9379901017	
16	Evaporator Sub Assy	9364499604	
17	Pipe Thermistor	9900623005	

INDOOR UNIT
ARHG18LLTB

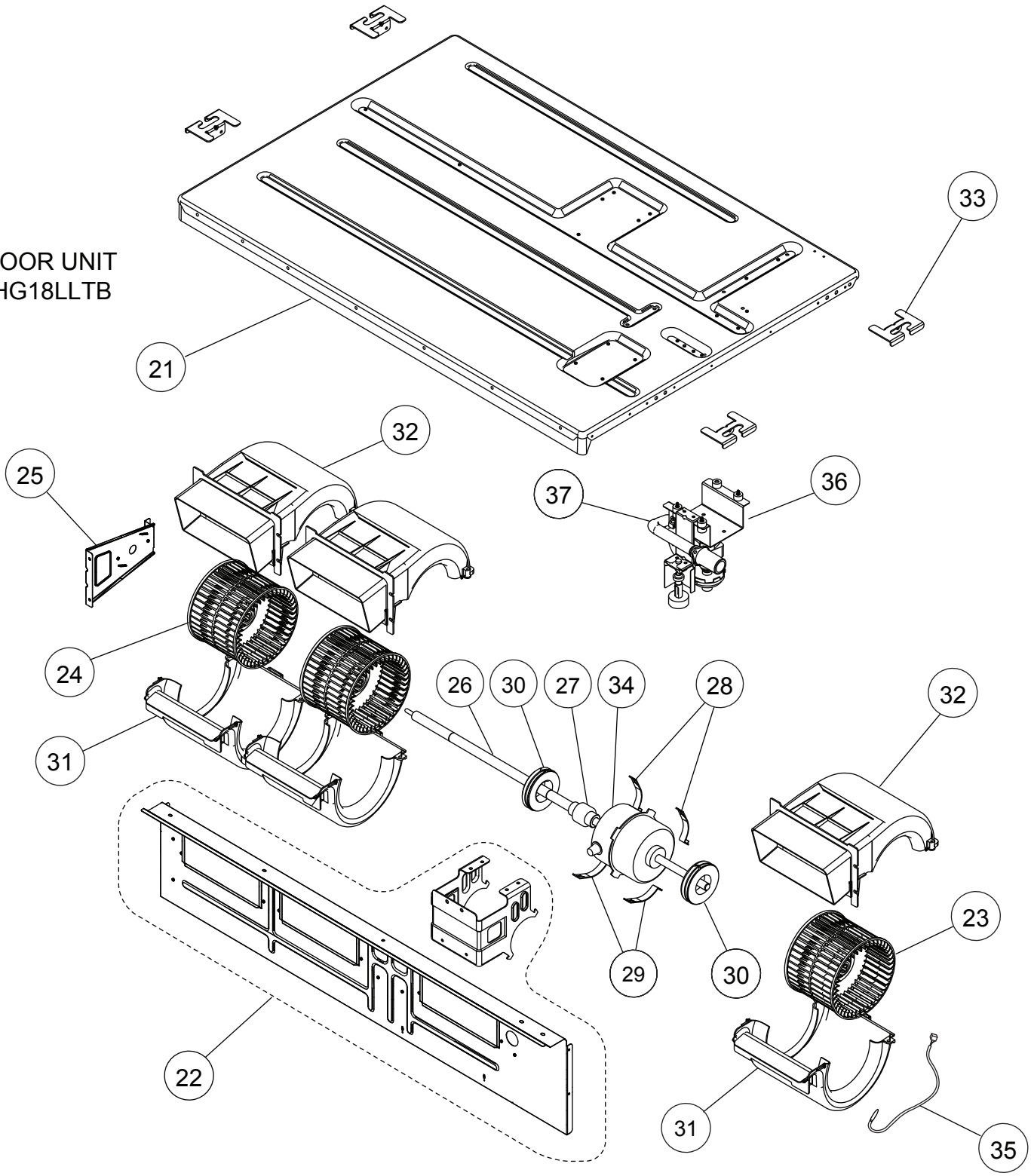

Ref	Description	Parts number	
21	Top Panel Sub Assy	9379908016	
22	Separator Sub Assy	9379898010	
23	Sirroco Fan Assy	9379570022	
24	Sirroco Fan Assy	9379570039	
25	Bracket (Bearing Sub Assy)	9379627009	
26	Shaft	9380398004	
27	Joint Assy	9378038011	
28	Motor Band Assy	9379613002	
29	Motor Band	9379614009	

Ref	Description	Parts number	
30	Rubber (Vibration Proof)	9379644006	
31	Casing B	9379572002	
32	Casing U	9379571005	
33	Hook Metal	9379889001	
34	Fan Motor Assy	9602968015	
35	Thermistor (Room)	9703299247	
36	Drain Pump Sub Assy	9379914000	
37	Drain Hose Assy	9379913003	

INDOOR UNIT
ARHG12LLTB
ARHG14LLTB
ARHG18LLTB

Ref	Description	Parts number	
41	Control Cover Sub Assy	9379806039	
42	Control Box Assy	9380041023	
43	Terminal Bracket	9380132011	
44	PCB Holder	9379402002	
45	Power Supply PCB	9707398267	
46	Controller PCB (12)	9707393897	
46	Controller PCB (14)	9707393903	
46	Controller PCB (18)	9707393910	
47	Reactor Assy	9707457018	
48	Terminal 3P	9306489045	
49	Terminal 3P (Wired Remote)	9703345012	
50	Wired Remote Control	9318593013	

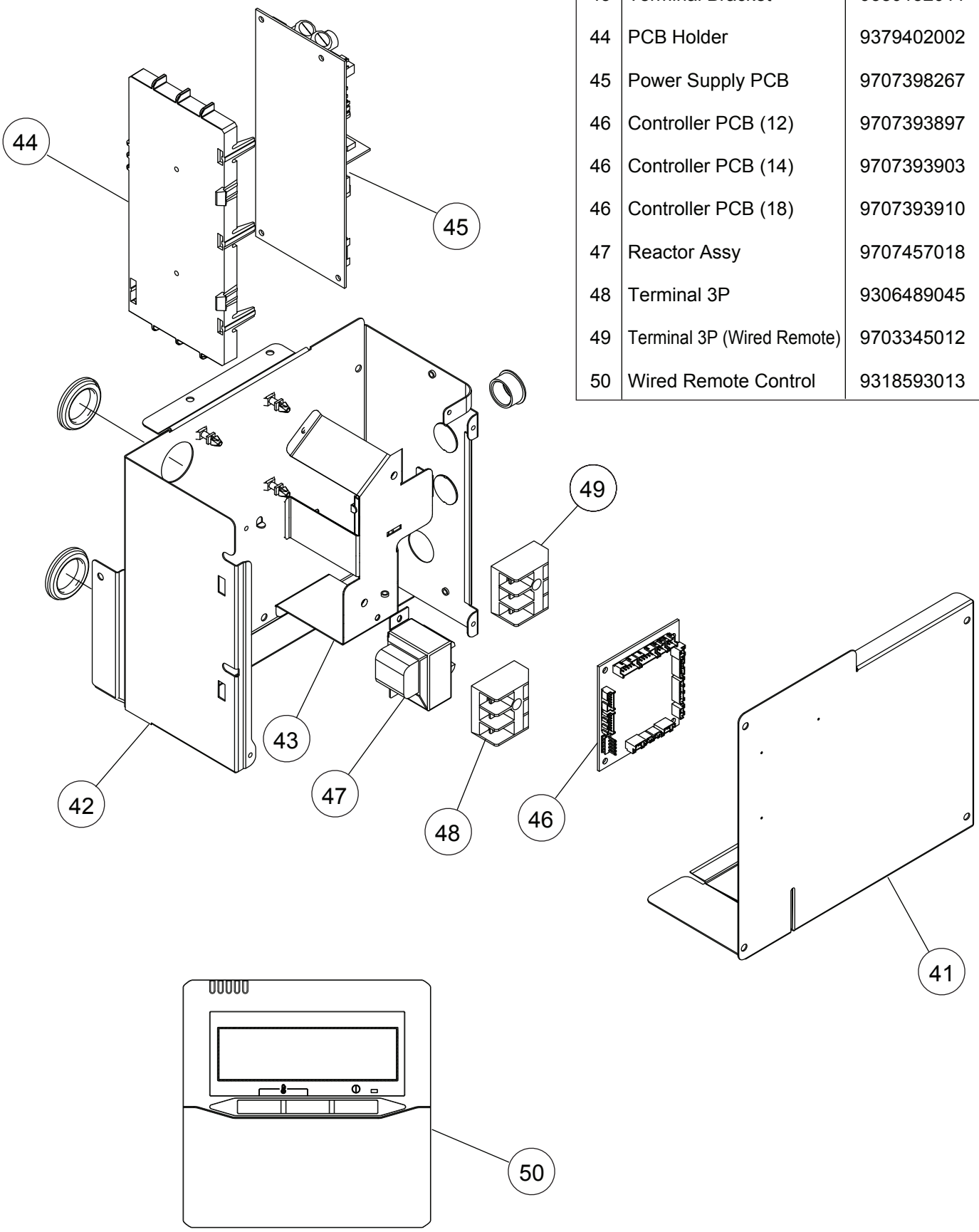

PARTS

OUTDOOR UNIT

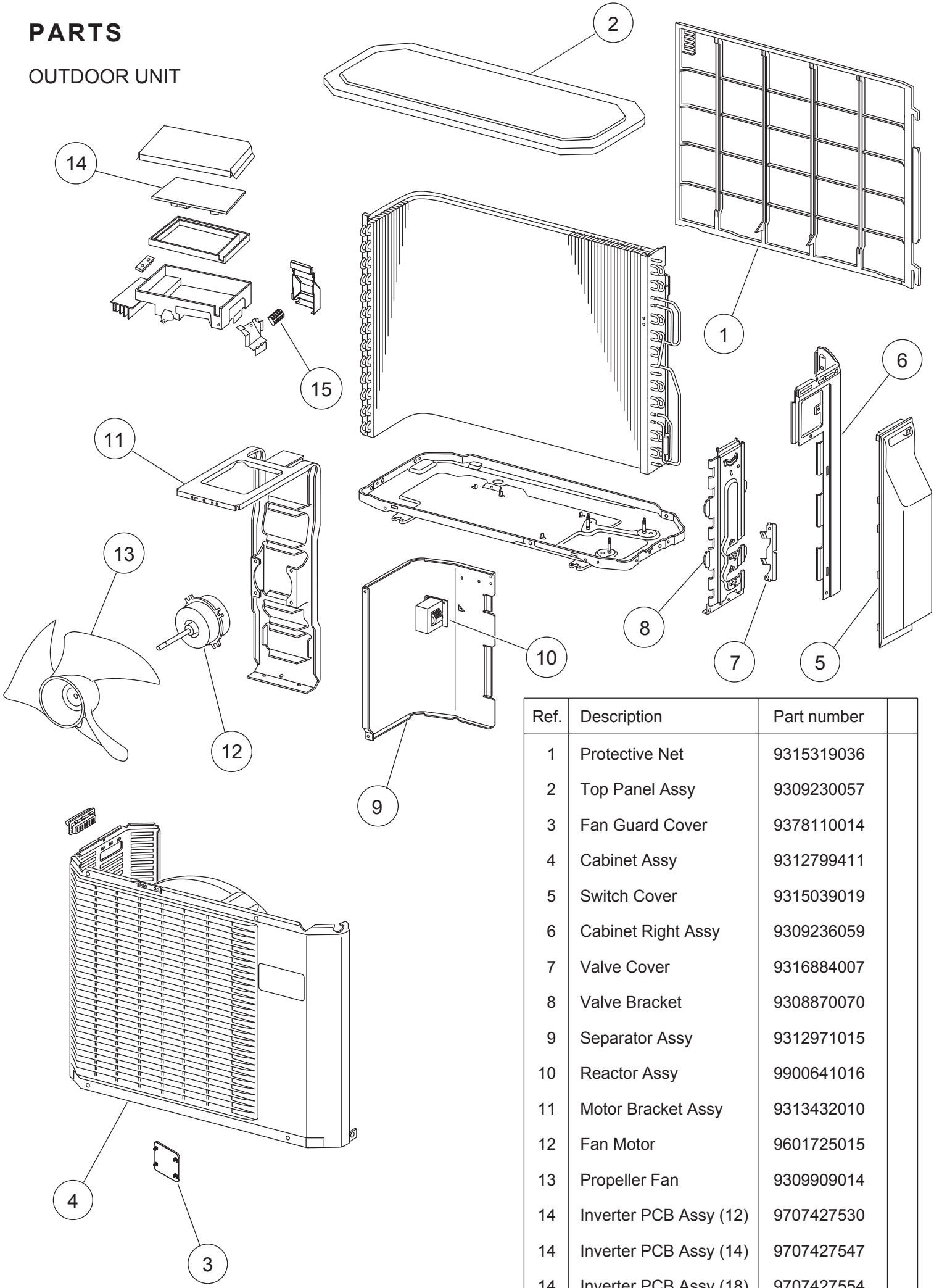

Ref.	Description	Part number	
1	Protective Net	9315319036	
2	Top Panel Assy	9309230057	
3	Fan Guard Cover	9378110014	
4	Cabinet Assy	9312799411	
5	Switch Cover	9315039019	
6	Cabinet Right Assy	9309236059	
7	Valve Cover	9316884007	
8	Valve Bracket	9308870070	
9	Separator Assy	9312971015	
10	Reactor Assy	9900641016	
11	Motor Bracket Assy	9313432010	
12	Fan Motor	9601725015	
13	Propeller Fan	9309909014	
14	Inverter PCB Assy (12)	9707427530	
14	Inverter PCB Assy (14)	9707427547	
14	Inverter PCB Assy (18)	9707427554	
15	Terminal	9703874031	

OUTDOOR UNIT

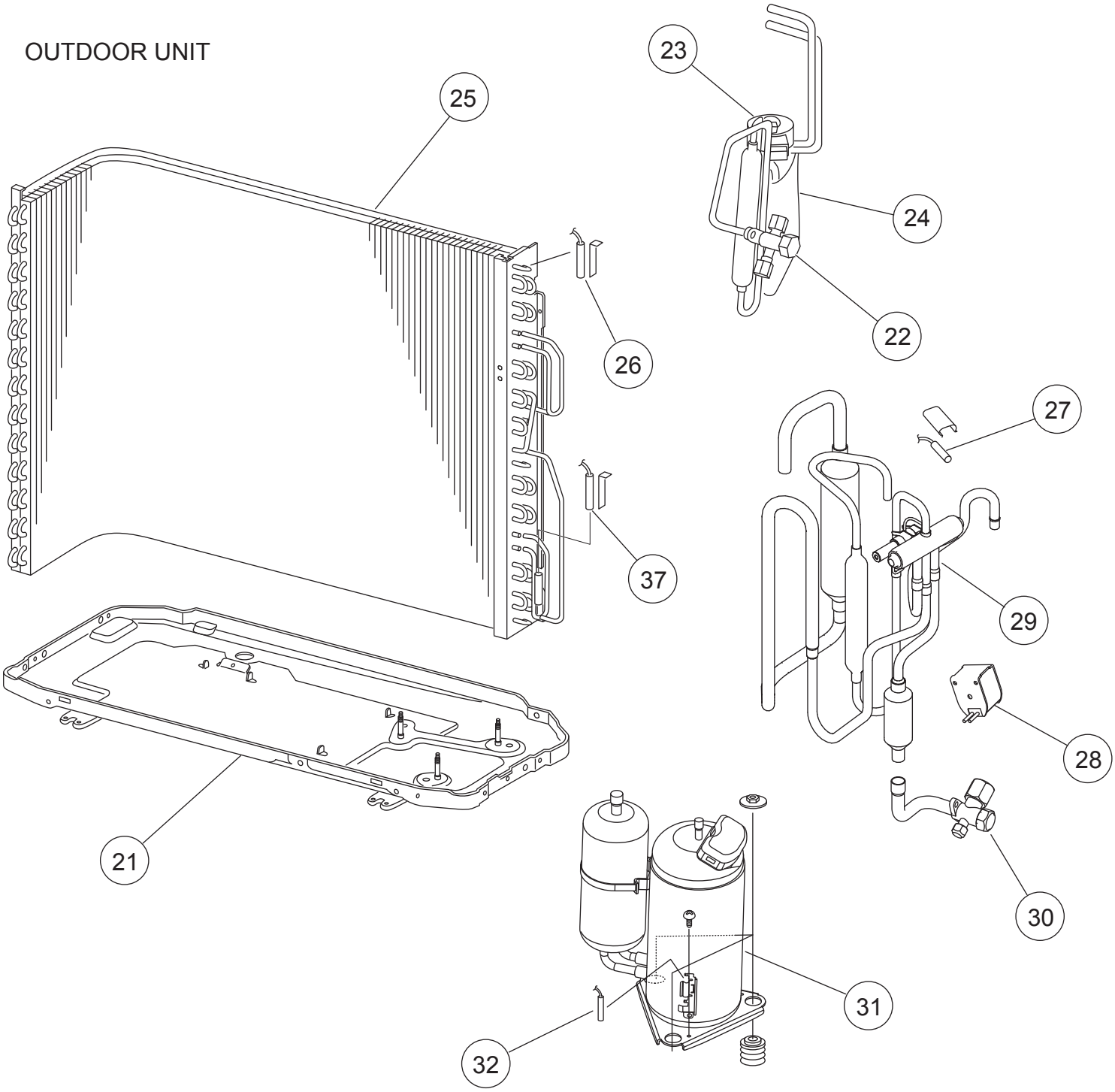

Ref.	Description	Part number	
21	Base Assy	9308869081	
22	2-way Valve Assy	9970093012	
23	Expansion Valve Coil	9900057039	
24	Pulse Motor Valve Assy	9311641018	
25	Condenser Total Assy	9311381068	
26	Heat Exchanger Thermistor	9900403010	
27	Thermistor Assy	9900148027	

Ref.	Description	Part number	
28	Solenoid	9970033018	
29	4-way Valve Assy	9315311030	
30	3-way Valve Assy	9970092015	
31	Compressor Assy	9313763039	
32	Compressor Thermistor	9900156046	
--	Outdoor Thermistor	9900210045	
--	Drain Assy	9303029015	

ACCESSORIES

INDOOR UNIT

Name and Shape	Q'ty	Application
Installation template	1	For positioning the indoor unit
Washer	8	For installing indoor unit
Coupler heat insulation (Large)	1	For indoor side pipe joint (Large pipe)
Coupler heat insulation (Small)	1	For indoor side pipe joint (Small pipe)
Binder	Medium 3	For power supply and remote control cable binding.
	Large 4	For fixing the coupler heat insulation.
Filter (Small)	2	(ARHG12LLTB ARHG14LLTB)
Filter (Big)	2	(ARHG18LLTB)

Name and Shape	Q'ty	Application
Drain hose	1	For installing drain pipe VP25 (O.D.32 I.D.26)
Hose band	1	For installing drain hose
Drain hose insulation B	1	Insulates a drain hose
Wired remote control	1	
Remote control cable	1	For connecting the remote control
Tapping screw (M4 × 16 mm)	2	For installing the remote control

OUTDOOR UNIT

Name and Shape	Q'ty	Application
Drain pipe	1	For drain piping work. 9303029015
Adapter assy	1	To connect 12,000 BTU model 9370244007

OPTIONAL PARTS

Exterior	Parts name	Model number	Summary
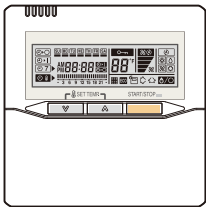	Wired remote controller	UTY-RNNGM	Unit control is performed by **wired remote controller**.
	Simple remote controller	UTY-RSNGM	Unit control is performed by simple remote controller.
	IR receiver unit	UTY-LRHGM	Unit control is performed by wired remote controller.
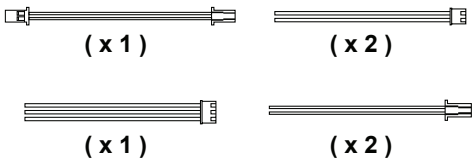	External control set	UTD-ECS5A	Use to connect with various peripheral devices and air conditioner PC board. (Set of 6)
	Remote sensor unit	UTY-XSZX	New amenity space can be offered by installing the **Remote sensor** in the remote controller.
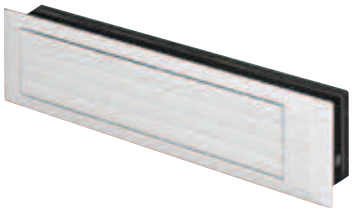	Auto louver grille kit	UTD-GXSA-W	(ARHG12LLTB ARHG14LLTB)
		UTD-GXSB-W	(ARHG18LLTB)

1112G4004